#		QTY.	TOTAL INCHES	WT.
1	1 1/4" ROUND BAR STRAP	1	49	17
2	C4 * 5.4# - CROSS MEMBER	2	39	18
3	C4 * 5.4# - UPRIGHTS	4	347	156
4	C4 * 5.4# - LEFT & RIGHT BASE	2	60	27
5	C4 * 5.4# - FT.; MID; REAR BASE	3	123	55
6	1 1/4" ROUND BAR PINS	2	48	22
7	PLYWOOD	1		12

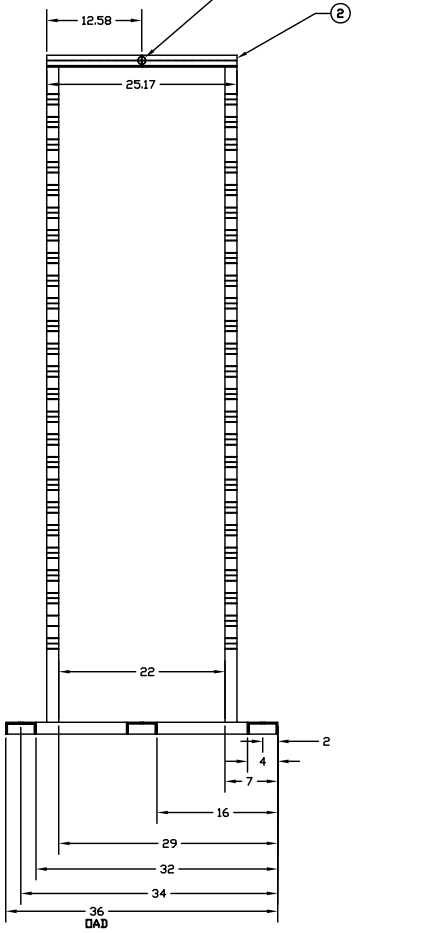

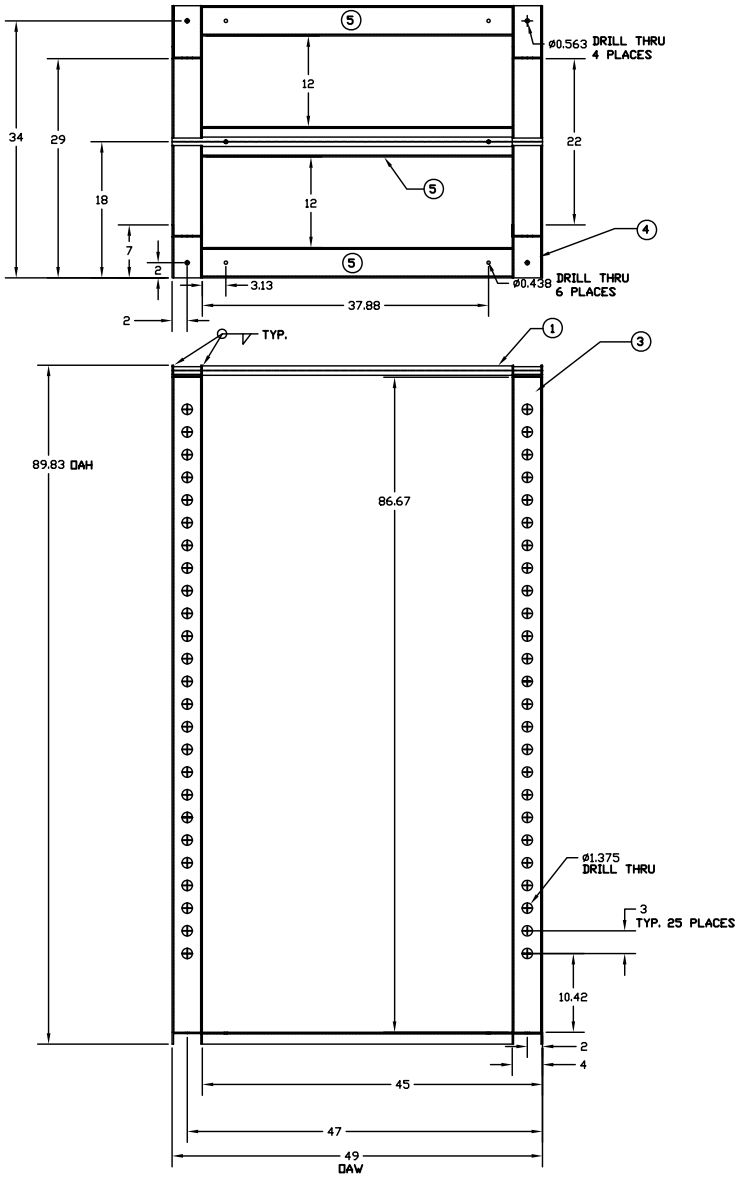

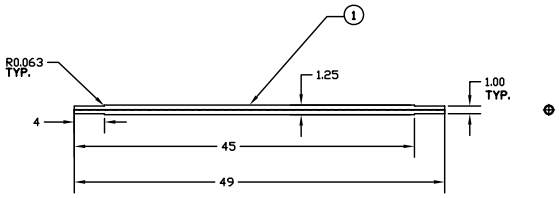

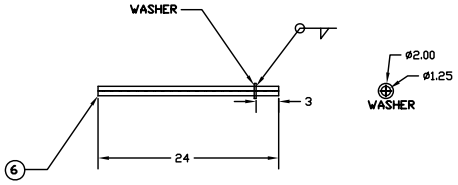

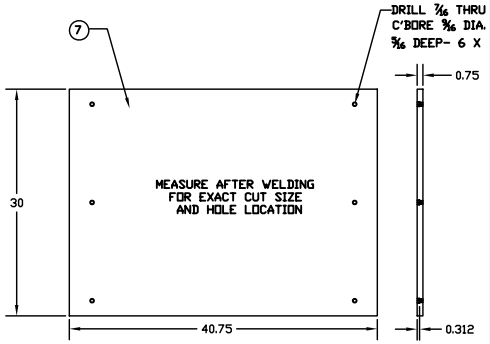

NOTES:
1. PAINT ALL ITEMS BLACK EXCEPT PINS AFTER ASSEMBLY

MARK	DESCRIPTION	BY	APPD.	DATE

ALL DIMENSIONS ARE IN INCHES UNLESS OTHERWISE SPECIFIED

SCALE: 1/8=1

CUSTOMER REFERENCE DATA

P.O. NO. | DWG. NO.

DRAWN BY | CHECKED AND APPROVED BY

DATE | DATE

DWG S/O | DWG. NO. D- | REV.

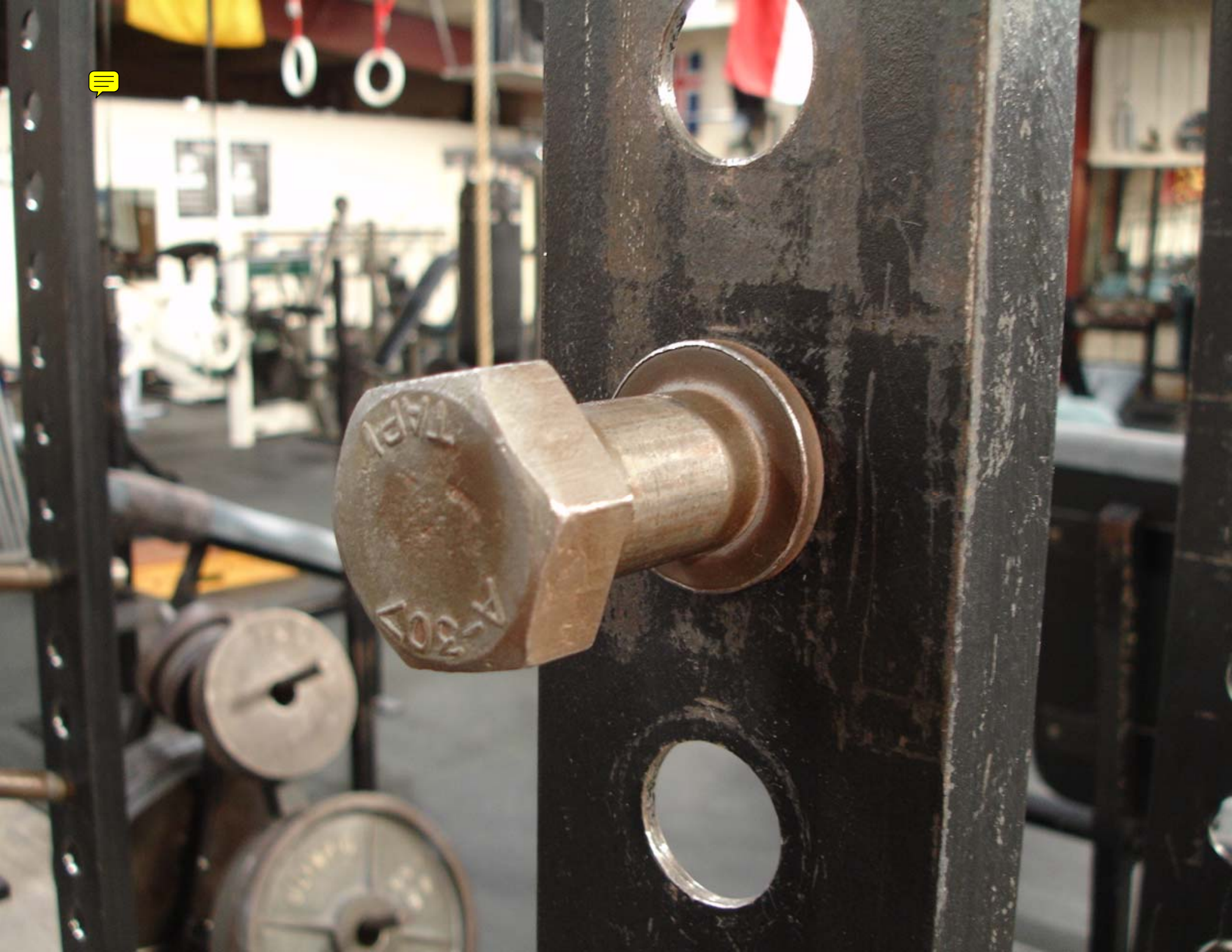
TAPI
A-307